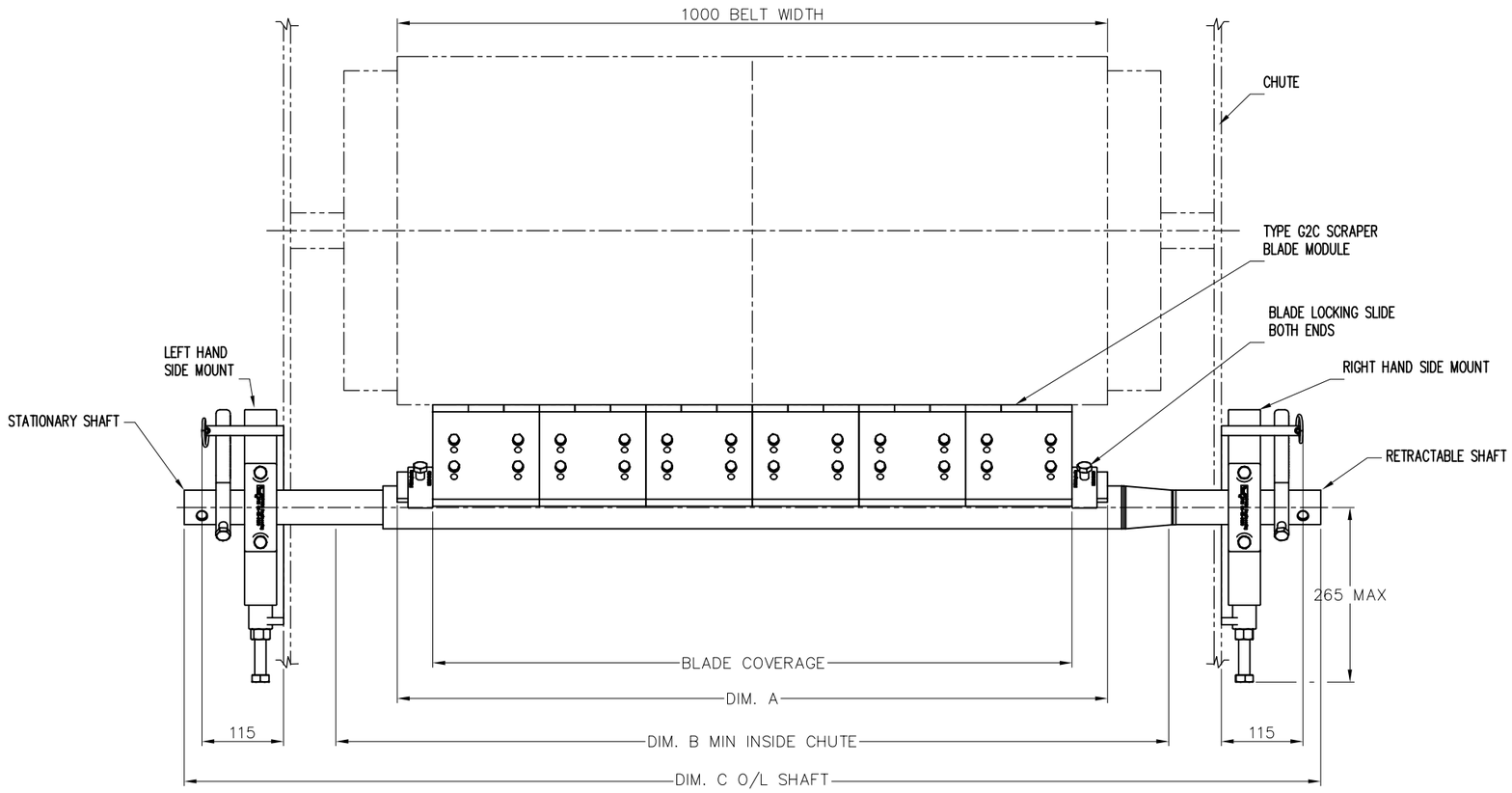

FRONT VIEW

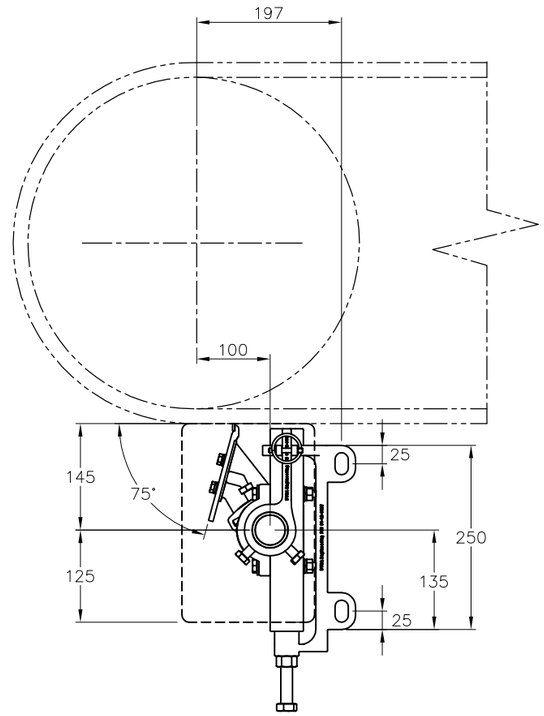

SIDE VIEW

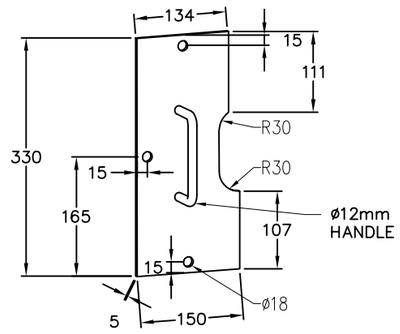

CHUTE COVER DETAILS
(SUPPLIED ON REQUEST)

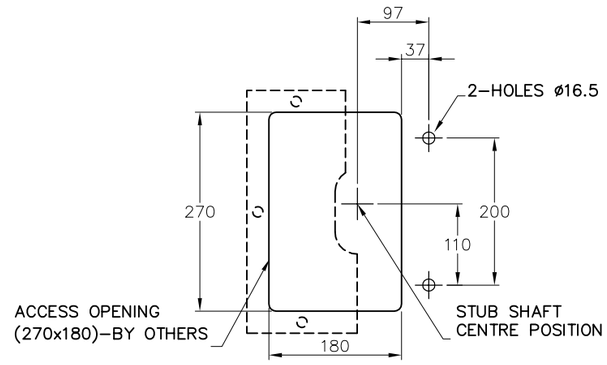

OPERATOR & FAR SIDE MOUNT HOLES
& CUT-OUT DETAILS - BY OTHERS

FOR SCRAPERS 1500 BELT WIDTH AND ABOVE CONTACT **DYNA ENGINEERING** FOR INSTALLATION ADVICE

BELT WIDTH	350	400	450	500	600	650	750	800	900	1000	1050	1100	1200	1350	1400	1500	1600	1800	2000	2100	2200	2400	2500	2600	2800	3000	3500
BLADE MODULES	2		3		3		4		5	6	6	7	7	8		9	10	11	12	13	13	14	15	16	17	18	22
BLADE COVERAGE	300		450		450		600		750	900	900	1050	1050	1200		1350	1500	1650	1800	1950	1950	2100	2250	2400	2550	2700	3300
SHAFT DIAMETER	ø60.3																	ø76.1			ø76.1 DUAL						
DIM. A	400		550		550		700		1000		1150		1150	1300		1600		1750	2050		2050	2200	2350	2500	2650	2800	3400
DIM. B	550		700		700		900		1150		1370		1370	1620		1770		2000	2300		2300	2450	2600	2750	2900	3050	3650
DIM. C	750		950		1300		1450		1850		1950		2200	2400		2800		2900	3200		3400	3600	3700	3800	4000	4200	4700
NOM O/S CHUTE	700		900		1000		1200		1400		1500		1600	1800		2000		2300	2600		2800	3000	3100	3200	3400	3600	4100

NOTES.

1. FAST FIT G2C SCRAPER SHOWN IS FOR A 1000mm WIDE BELT.
2. PATENT PENDING 2015902549

FASTFIT ORDERING INFORMATION

SCRAPER BODY PART NUMBER – 03-16-(BELT WIDTH)

EXAMPLE

1000 BELT WIDTH SCRAPER PART NUMBER – 03-16-1000

THIRD ANGLE PROJECTION | DO NOT SCALE

No.	REVISION	DRN.	CHD.	DATE
G				
F				
E				
D				
C	TABLE DATA UPDATED	SJ	GG	310817
B	TABLE DATA UPDATED	SJ	GG	230817
A	FIRST ISSUE	SJ	GG	190815

TITLE

FastFit G2C SECONDARY RETRACTABLE SCRAPER
SHOWN WITH SPRING DAMPNERS
GENERAL ARRANGEMENT
P/N 03-16-0350 TO 03-16-3500

THIS IS A WORKSHOP DRAWING AND IS NOT TO BE ISSUED OUTSIDE OF DYNA ENGINEERING UNLESS AUTHORISED COPYRIGHT APPLIES.

DESIGN	DYNA
DRN.	SJ
DATE	190815
CHKD.	GG
DATE	19085
APPD.	
DATE	
SCALE	N.T.S.

DYNA Engineering

P.O. BOX 84
BAYSWATER WA 6933
TEL: (08)9473 4300
FAX: (08)9473 4399

DWG No. GA-0126 | REV. C | A3