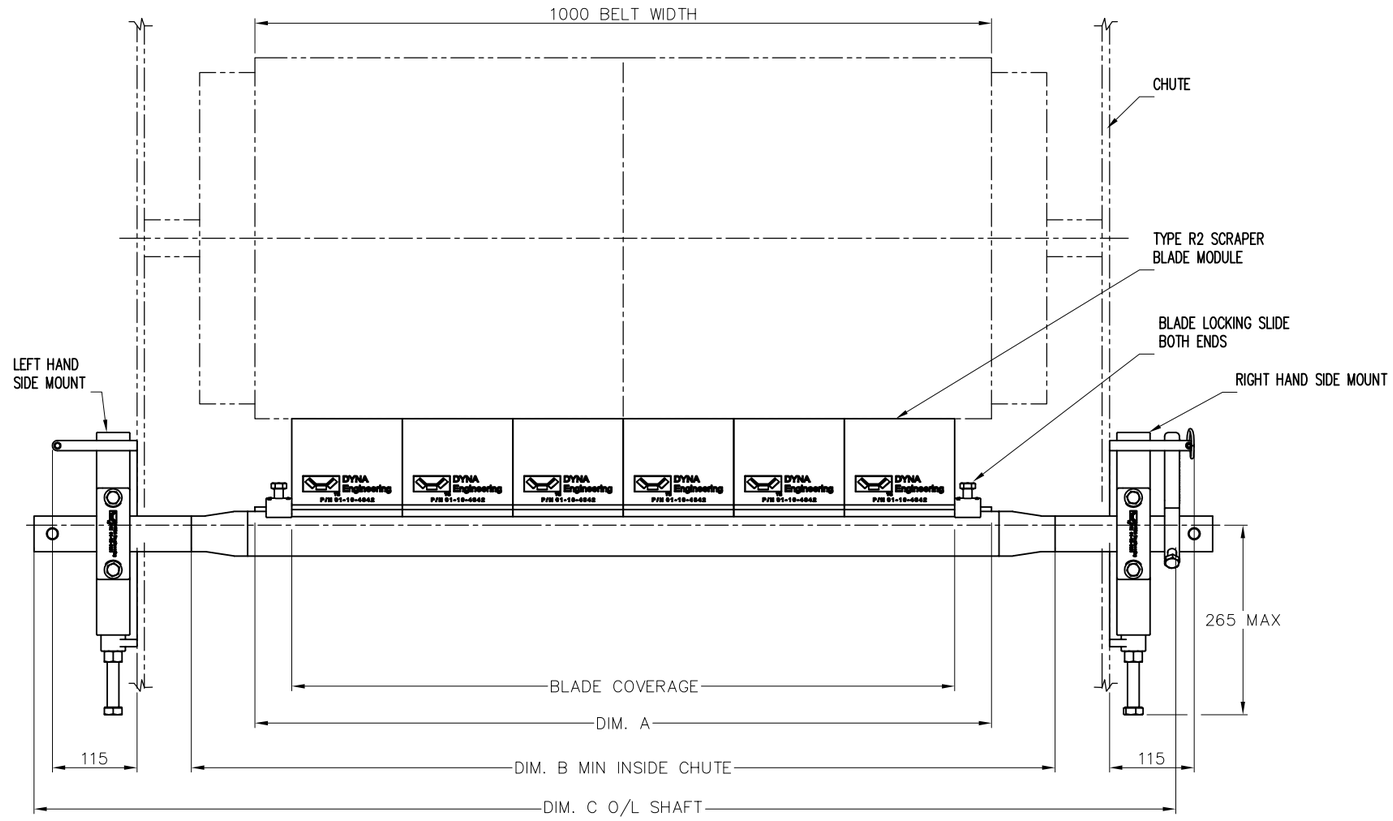

FRONT VIEW

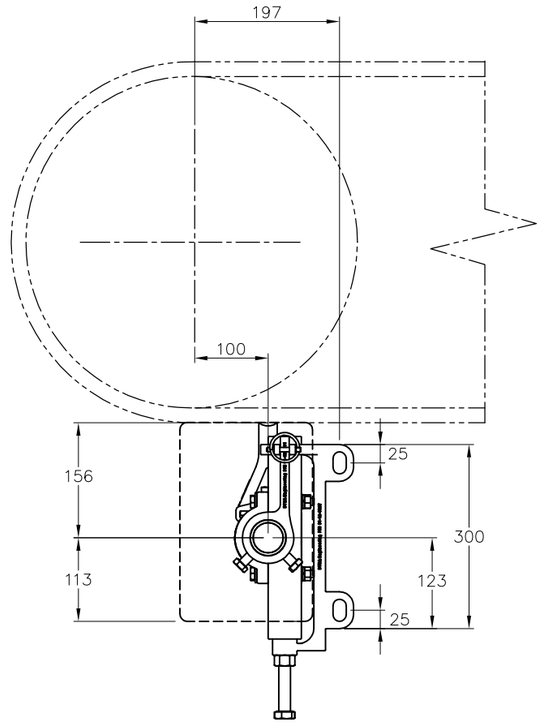

SIDE VIEW

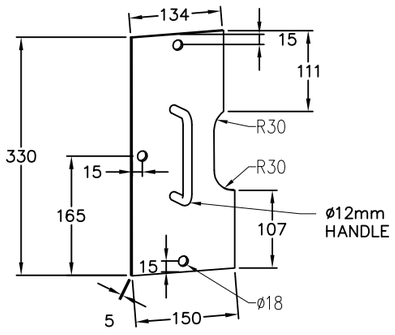

CHUTE COVER DETAILS
(SUPPLIED ON REQUEST)

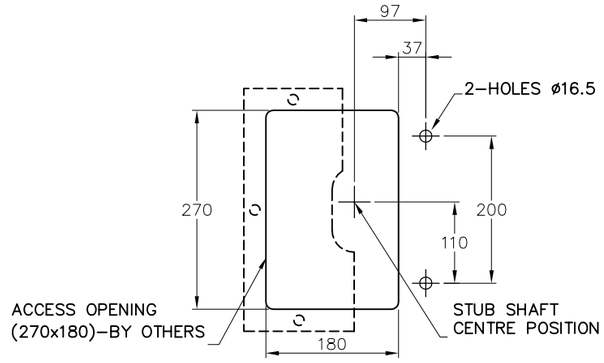

OPERATOR & FAR SIDE MOUNT HOLES
& CUT–OUT DETAILS – BY OTHERS

FOR SCRAPERS 1500 BELT WIDTH AND ABOVE CONTACT **DYNA ENGINEERING** FOR INSTALLATION ADVICE

BELT WIDTH	450	500	600	650	750	800	900	1000	1050	1100	1200	1350	1400	1500	1600	1800	2000	2100	2200	2400	2500	2600	2800	3000	3500
BLADE MODULES	3		4		5		6		7		8	9		10		12	13		14	16		17	18	20	23
BLADE COVERAGE	450		600		750		900		1050		1200	1350		1500		1800	1950		2100	2400		2550	2700	3000	3450
SHAFT DIAMETER	ø48.3						ø60.3				ø76.1						ø76.1 DUAL								
DIM. A	550		700		850		1000		1150		1300	1450		1600		1900	2100		2300	2500		2700	2900	3100	3600
DIM. B	450		600		750		1172		1322		1498	1648		1798		2098	2298		2498	2698		2998	3098	3298	3798
DIM. C	950		1100		1300		1500		1600		1800	2000		2300		2500	2900		3000	3200		3300	3600	3800	4300

NOTES.

1. FAST FIT R2 SCRAPER SHOWN IS FOR A 1000mm WIDE BELT.
2. PATENT PENDING 2015902549

FASTFIT ORDERING INFORMATION

SCRAPER BODY PART NUMBER – 03–17–(BELT WIDTH)

EXAMPLE

1000 BELT WIDTH SCRAPER PART NUMBER – 03–17–1000

THIRD ANGLE PROJECTION | DO NOT SCALE

No.	REVISION	DRN.	CHD.	DATE
G				
F				
E				
D				
C				
B				
A	FIRST ISSUE	SJ	GG	190815

TITLE
FastFit R2 REVERSING SECONDARY SCRAPER
SHOWN WITH SPRING DAMPNERS
GENERAL ARRANGEMENT
P/N 03–17–0350 TO 03–17–3500

THIS IS A WORKSHOP DRAWING AND IS NOT TO BE ISSUED OUTSIDE OF DYNA ENGINEERING UNLESS AUTHORISED COPYRIGHT APPLIES.

DESIGN DYNA
DRN. SJ
DATE 190815
CHKD. GG
DATE 190815
APPD.
DATE
SCALE N.T.S.

DYNA Engineering

P.O. BOX 84
BAYSWATER WA 6933
TEL: (08)9473 4300
FAX: (08)9473 4399

DWG No. GA–0123 REV. A A3