Could a Diverter Plow help your conveying operation?

Graeme Greaves from Dyna Engineering explains the ins and outs of Diverter Plows, how they work, how they are designed and why they can lift productivity when fitted to certain conveying systems.

ABOVE
Dyna Engineering's managing director, Graeme Greaves, discusses the productivity benefits of diverter ploughs on certain systems.

A DIVERTER PLOW (DP), ALSO KNOWN AS a diversion plough, is an apparatus that redirects or discharges material being conveyed by a belt, usually positioned mid-way along the conveyor belt.

When engaged, the DP blade is lowered (or the belt is raised) to divert the conveyed material off the conveyor belt. This is usually used in conjunction with a chute so that bulk material is pushed over one or both sides of the belt.

The blade can be raised or lowered as required by manual or process control, with hydraulic, pneumatic or electric motor drive activation methods.

When the original discharge position on the conveyor is no longer needed, a DP can be placed on the conveyor to transfer the material to another location. A common flow alteration application is to allow the material to bypass a crushing, screening or other mining process to avoid unnecessary processing.

A DP can be fitted onto a typical troughed conveyor system with little modification (if any) to the existing structure, proving itself to be a low-cost solution compared to other devices, such as trippers, designed for discharging equipment. It is not typically incorporated into a new conveyor system, rather it becomes a necessity as the requirement of the conveying operation changes.

Typical applications of a DP include using the crushing plant to manufacture road base, removal of contaminated or low-quality material from the belt prior to reaching storage bins, or removal of material in the case of breakdown. Each application calls for different features to be added or removed from the DP design.

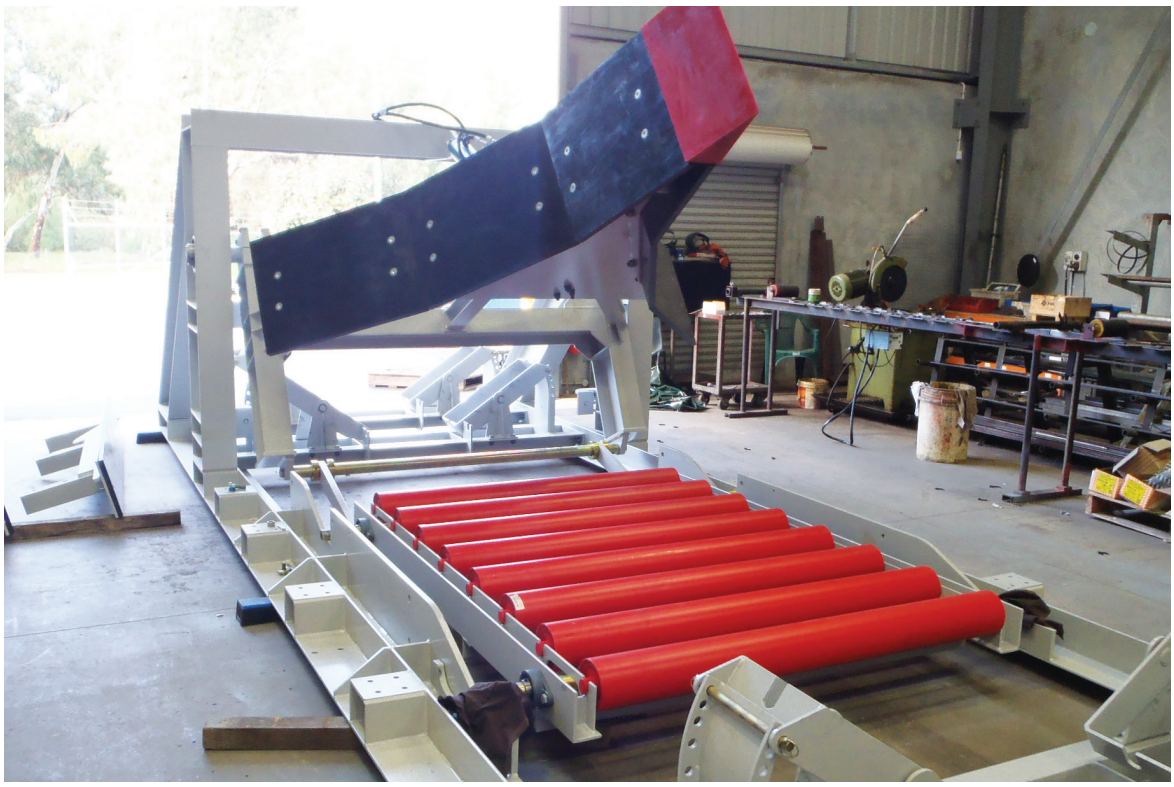

LEFT:
Diverter ploughs are fitted onto existing structures and allow for normal conveyor operations when not in use.

How does it actually work?

Designed to fit onto an existing conveyor structure, a DP allows the normal operation of the conveyor to continue, even when the DP is not in use. When activated, the blade will start to lower onto the belt while the belt support lifts the belt from its trough shape to a flat shape. The blade will lightly contact the belt across the entire width, ready to divert material away from the belt surface. Material being conveyed then impacts the blade in a steady stream, and the blade will begin to push the material off one or both sides of the conveyor into discharge chutes.

The main components of a Diverter Plow are:

- The blade
- Belt support
- Discharge chutes
- Structural frame

DP blades are designed to contact the conveyor belt and redirect and push the conveyed material into side chutes. The blades are usually single-or double-sided (V-shaped).

Single-sided blades are generally used in single chute designs as the material is directed in one direction only. Double-sided blades are used when discharge chutes are required on both sides of the DP.

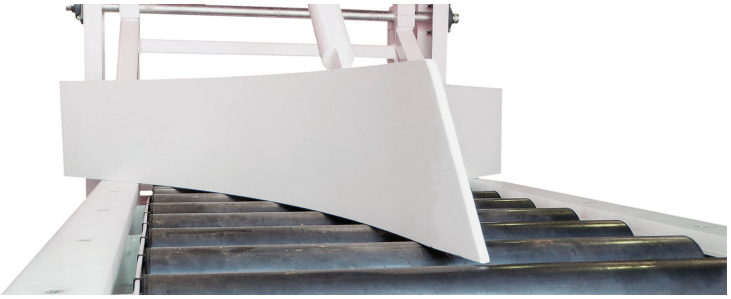

ABOVE: *Diverter ploughs are usually positioned mid-way along the conveyor belt.*

Conveyor speed, the conveyed material and the impact force of that material are some of the factors that will determine which design will fit certain applications best.

The belt support mechanism is constructed in a series of transitions and flat idlers that shape the belt from trough profile to a flat profile when engaged. During the normal operation of the conveyor, the conveyor belt forms a trough, which assists in keeping the material on the conveyor belt.

A system of rollers raises the belt to a flat horizontal plane, effectively removing the trough from the belt. This function allows the blade to come down into full contact with the belt, avoiding the need to drag the material up and out of the trough.

RIGHT:
A series of transitions and flat idlers shape the belt from trough to flat profile when engaged.

A mechanical energy source (such as a hydraulic cylinder, pneumatic cylinder or electric motor) is normally connected to the belt support mechanism in order to lift the belt, however, it can be done manually.

The discharge chutes catch the material diverted by the blade over the side of the flattened belt and guide the material down to a suitable discharge location below the conveyor structure.

Typical discharge locations can include loading points on another conveyor, storage bins, stock piles or a dump truck parked below the discharge chute. Depending on the desired outcome, the discharged material may rejoin the process, be segregated, or moved to another location or stock piled for later further handling.

Design considerations

Wear-resistant blades

Dyna Trac Diverter Plow blades are made from high wear-resistance materials because the blades come into constant contact with extremely rough and coarse material which can easily wear away unsuitably designed blades.

Blades are commonly made out of hardened steel, engineered plastics or polyurethane

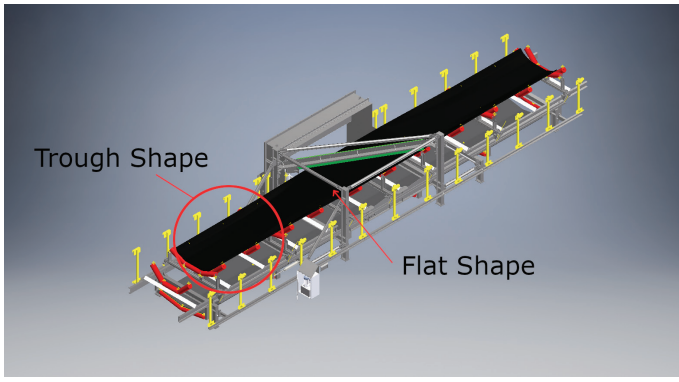

depending on the application. The composition of the blades is an important consideration in the design process. The blade needs to be wear-resistant enough to withstand the application but at the same time be subtle enough not to damage the conveyor belt.

Single or double-sided blades

The choice of blade is generally dictated by three factors: how fast the conveyor is running, how much material is being conveyed and where the material is being moved to.

A single-sided blade is useful when the

material flows easily, or the belt is relatively narrow. However, there are some limitations on the single-sided blade. Due to the material flow being redirected in one direction, there is a limit on how much material can be moved across the belt width and down through the chute. If the flow rate is too high, blockages and overflow can occur.

The double-sided blade can handle a higher flow rate when compared to a single-sided blade. Because the flow is split into two different streams, the distance the material needs to travel to reach the belt edge is reduced and the amount of material passing through each chute is reduced.

The disadvantage of the double-sided blade is that additional structures and chutes need to be built, which is an added cost.

Situations where DPs can be very useful

Bin maintenance and emptying of storage bins

Scheduled maintenance shutdowns are a common time for a DP to come into action. Material storage or surge bins need to be emptied in order for maintenance to take place on the liner plates.

A DP can be placed on the crushing circuit feed conveyor and as the shutdown commences, the material flow into the material storage bins is halted. At this point, the DP is engaged, allowing the material from the bin to be discharged through the feed conveyor and into a stockpile below, clearing the crushing circuit of material without needing to wait for all the material to be run out and the circuit to be emptied.

This allows a timely start to the shutdown, saving time and cost for employees and contractors alike.

De-watering

De-watering is applied when substantial amounts of water from rain or the mining process has been accumulated on the conveyor and needs to be removed before the ore is placed onto the conveyor.

A typical example would be a train loading facility where it is not desirable to spill thousands of litres of water into the bin and cause the ore to become muddy. This may result in material flow issues or localised flooding from the water.

Material separation

If the material being conveyed does not contain the desired element or is contaminated with foreign matter, a DP can be used to remove the material until the correct product is placed on the conveyor.

Another application of material separation is a multi-material facility that runs different types of material on the same conveyor. A DP is placed on the conveyor to separate the different materials or create different flow paths. B

About DYNA Engineering

Dyna Engineering is an Australian-owned and operated company with their head office and factory located in Perth, Western Australia.

The company specialises in the design, manufacture and supply of conveyor equipment and related services which can be tailored to an extensive range of applications, operations and operating conditions.

These designs incorporate common components and assemblies which allow easy modification from one design to another on short notice.

Its DYNAFastFit range of belt cleaners and adjusters can be converted from polyurethane to carbide blades without major modifications or replacement. Products are of robust construction, which allows them to withstand extremely harsh operating environments and deliver a long, trouble-free service life.

Dyna Engineering thoroughly test its products in both workshop and onsite situations to ensure they work as intended and to industry safety standards.